# Magnum suction-cup holders simple



These are particularly solid and robust components for carrying out high volume work, also in very difficult conditions.

Their special features include a nickel-plated steel rod, a pre-lubricated brass ring joint with a tight seal, one or two stainless steel springs, and a rapid straight or “L” shaped joint for connection to the suction tube. All of the suction cups indicated in the table below, shown with all the compatible hardness levels, can be used with the Magnum-type models. All the suction cups from article VD 90 to VD 160 are supplied with an aluminium ANTICORODO support which permits the replacement of the suction cups, which are interchangeable with the support.

Instead, for suction cups VDUS 250, 300 and 420, the aluminium or steel supports are fixed to the suction cup itself.

Rapid straight or “L” shaped joint for plastic tube diameter 6 x 8 = art. PMD.....L

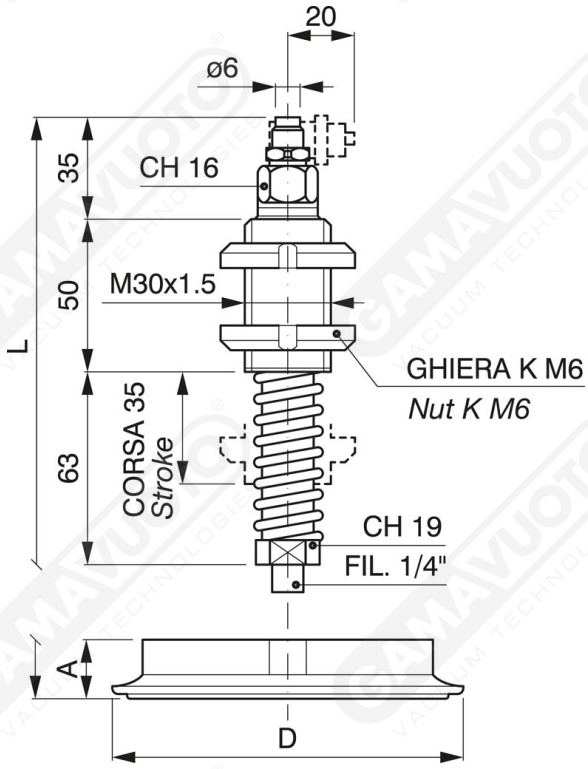


**Art. PMD 90/120/160**

| Art. | A | D | L |
|---|---|---|---|
| PMD 90 | 17.5 | 90 | 165.5 |
| PMD 120 | 17 | 120 | 165 |
| PMD 160 | 24 | 160 | 172 |

Also available with screwing length of 70 mm

NB: Disc not included (available on request)

The suction cups are supplied on request, specifying the material