High vacuum vane pumps - 18-25 mc/h



Characteristics

Gamavuoto oil injection single-stage vacuum pumps are the result of many years of experience in the vacuum technology sector, making constant adjustments to the needs of industry and the environment. The vast range of their performances (capacity from 5 mc/h to 250 mc/ h) allows every user to fi nd a pump to meet all their needs. Here is a list of the main characteristics:

- Can be used in any pressure range from 400 mm Hg to 759.5 mm Hg.
- On request low depression values.
- Low noise level. Little vibration.
- Efficient air cooling, ease of mounting
- Strength.
- Easy to maintain.
- Can be adapted to solve many problems, because of the vast range of accessories.
- Working temperature from 0°C to +50°C.

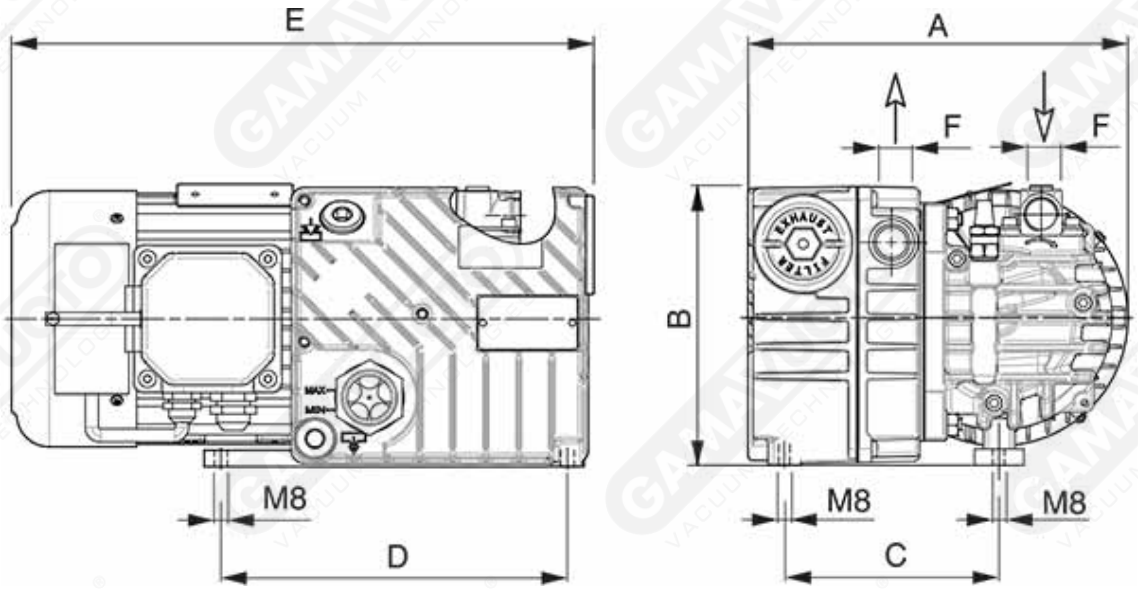

Art. GPZL 20

Art.	Vacuum flow		Final pressure ABS	Rpm		Motor power		Weight	A	B	C	D	E	F
	50 Hz Mc/h	60 Hz Mc/h	mbar (ass.)	50 Hz g/min	60 Hz g/min	50 Hz Kw	60 Hz Kw	kg						
GPZL 20	20	24	2	2800	3300	0.75	0.90	19	230	172	130	210	352	1/2"