Finned flat suction cups AF 20 Series



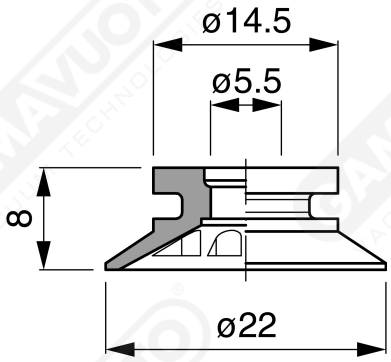

Art. AF 20 45

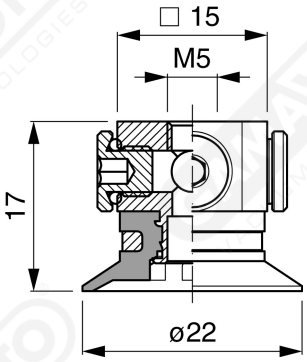

Art. AF 20 00

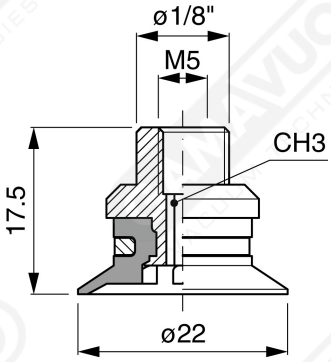

Art. AF 20 20

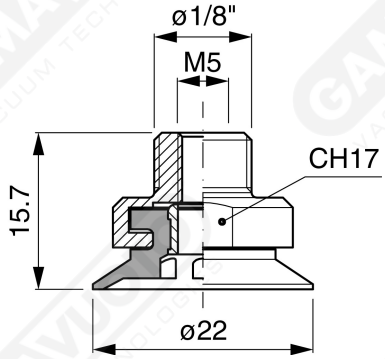

Art. AF 20 40

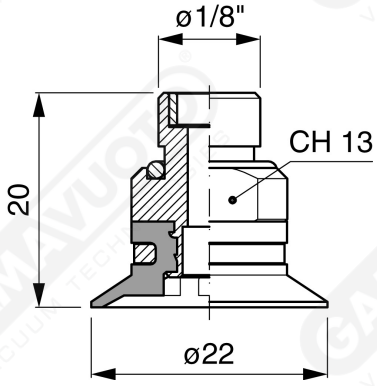

Art. AF 20 60 ÷ 64

Art. AF 20 60
with filter

Art. AF 20 61
with filter and check valve

Art. AF 20 63
without filter

Art. AF 20 64
with check valve without filter

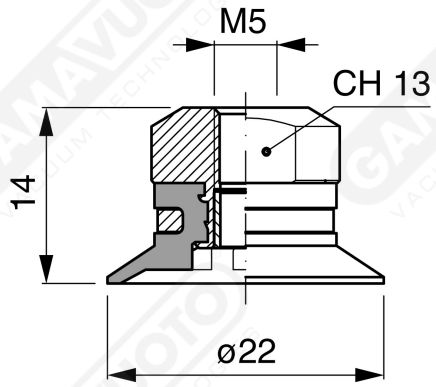

Art. AF 20 90 ÷ 93

Art. AF 20 90
with filter

Art. AF 20 91
with check valve

Art. AF 20 93
without filter