Bellows suction cups BF 20 Series



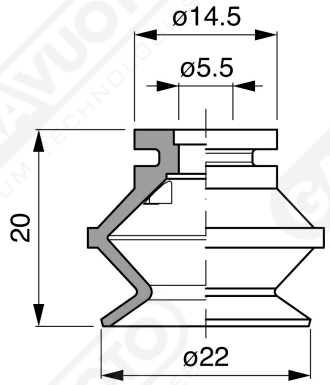

Art. BF 20 35

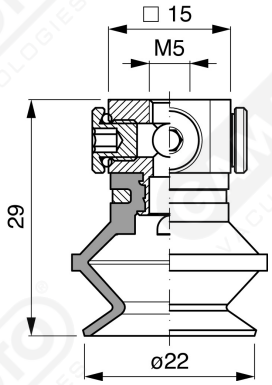

Art. BF 20 00

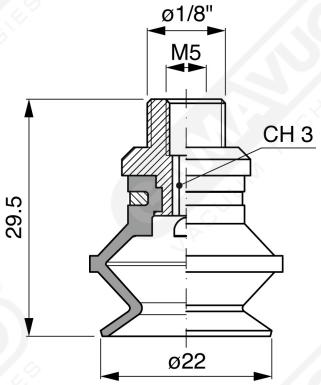

Art. BF 20 20

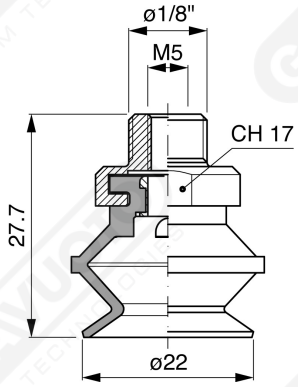

Art. BF 20 30

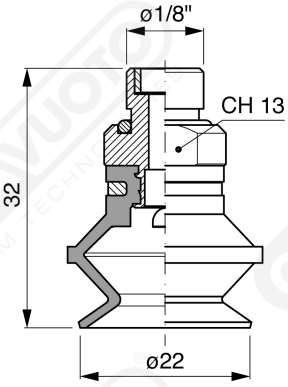

Art. BF 20 60 ÷ 64

Art. BF 20 60
with filter

Art. BF 20 61
with filter and check valve

Art. BF 20 63
without filterohne Filter

Art. BF 20 64
with check valve without filter

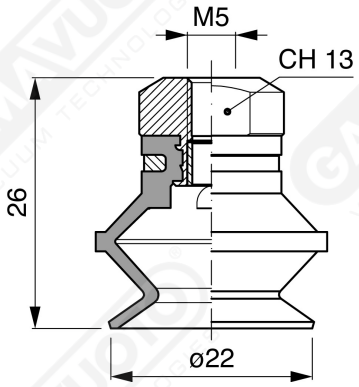

Art. BF 20 90 ÷ 93

Art. BF 20 90
with filter

Art. BF 20 91
with check valve

Art. BF 20 93
without filter