Bellows suction cups BF 40 Series



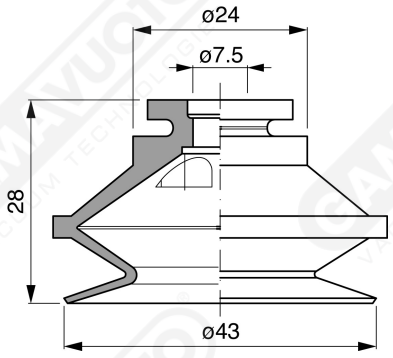

Art. BF 40 35

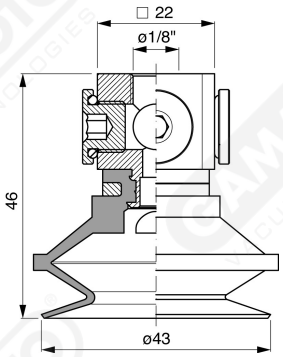

Art. BF 40 00

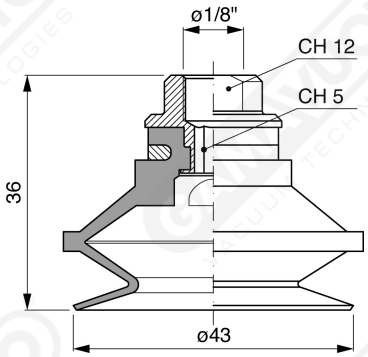

Art. BF 40 20

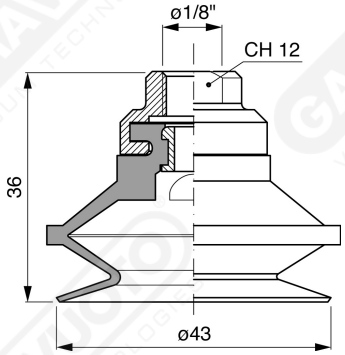

Art. BF 40 30

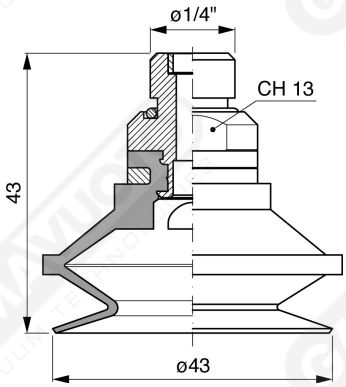

Art. BF 40 70 ÷ 74

Art. BF 40 70
with filter

Art. BF 40 71
with filter and check valve

Art. BF 40 73
without filter

Art. BF 40 74
with check valve without filter

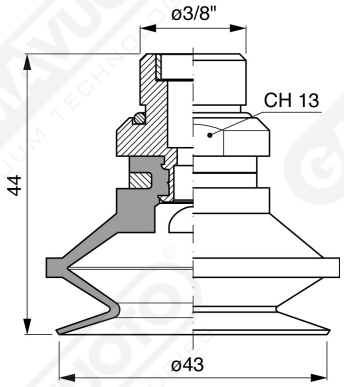

Art. BF 40 80 ÷ 84

Art. BF 40 80
with filter

Art. BF 40 81
with filter and check valve

Art. BF 40 83
without filter

Art. BF 40 84
with check valve without filter

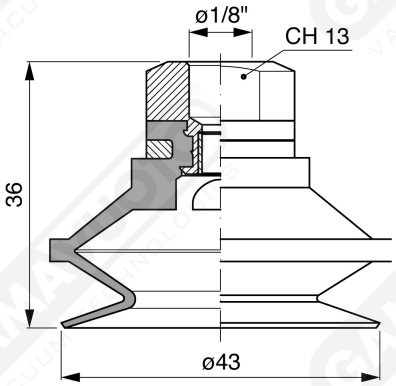

Art. BF 40 90 ÷ 93

Art. BF 40 90
with filter

Art. BF 40 91
with check valve

Art. BF 40 93
without filter