Bellows suction cups BF 75 Series



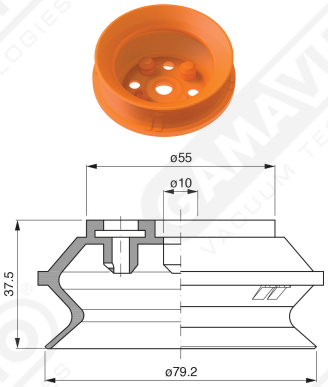

Art. BF 75 35

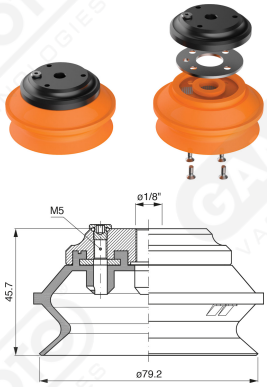

Art. BF 75 30



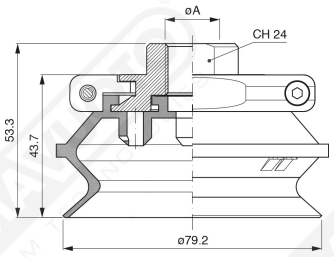

Art. BF 75 32/33

Code	.øA
BF 75 32	3/8”
BF 75 33	1/2”