# Bellows suction cups BF 110 Series



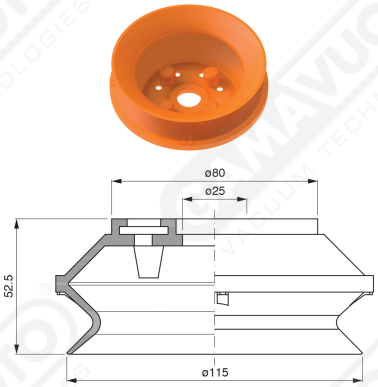


**Art. BF 110 35**

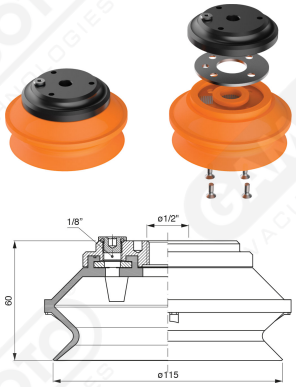


**Art. BF 110 30**



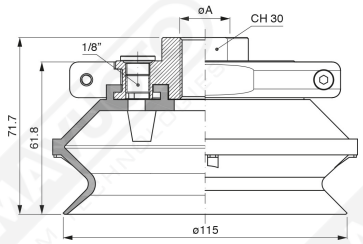


**Art. BF 110 32/33**

| cod | .øA |
|---|---|
| **BF 110 32** | 3/8” |
| **BF 110 33** | 1/2” |