Bellows suction cups BF 160 Series



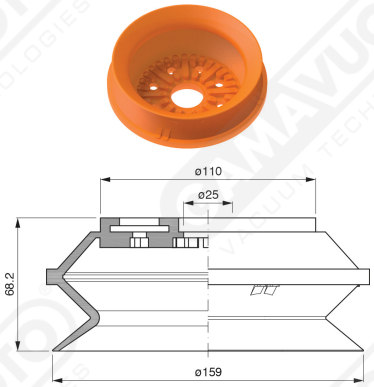

Art. BF 160 35

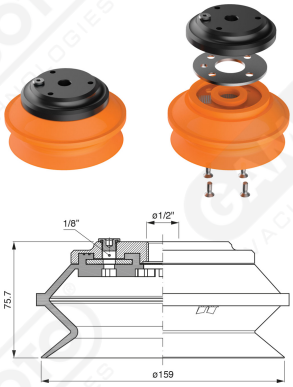

Art. BF 160 30

with internal filter

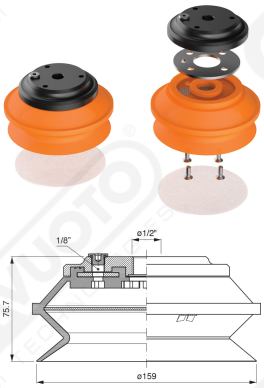

Art. BF 160 31

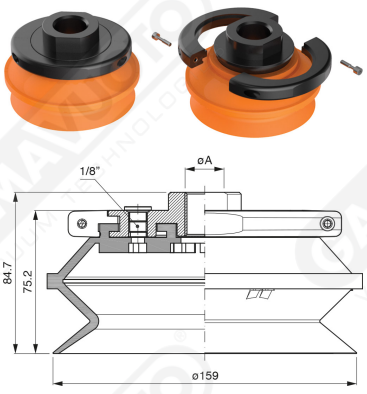

Art. BF 160 32/33

cod	.øA
BF 160 32	1/2”
BF 160 33	3/4”



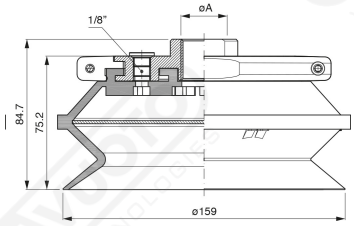

Art. BF 160 321/331

with internal filter

cod	øA
BF 160 321	1/2”
BF 160 331	3/4”