Conical suction cups EF 50 Series



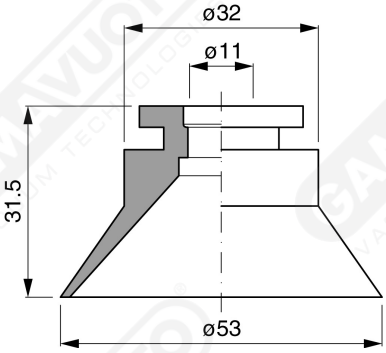

Art. EF 50 15

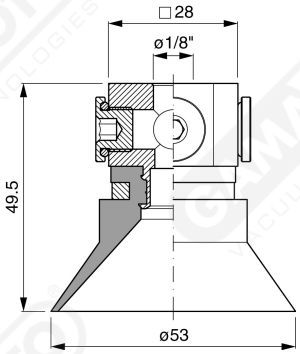

Art. EF 50 00

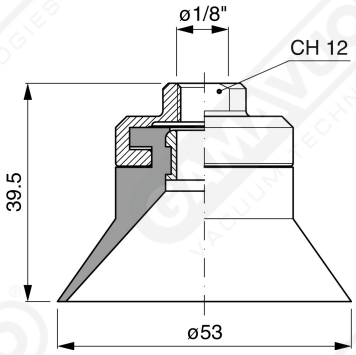

Art. EF 50 10

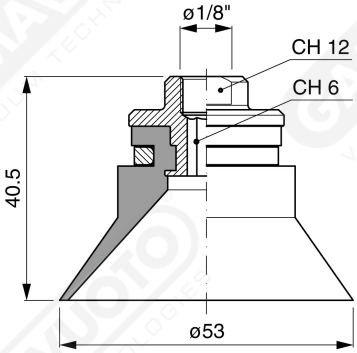

Art. EF 50 20

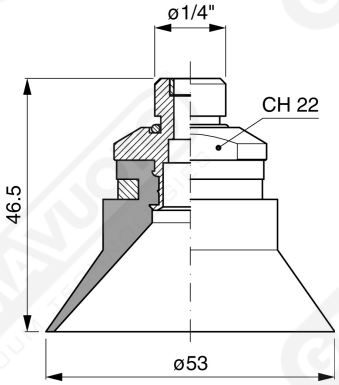

Art. EF 50 70 ÷ 74

Art. EF 50 70
with filter

Art. EF 50 71
with filter and check valve

Art. EF 50 73
without filter

Art. EF 50 74
with check valve without filter

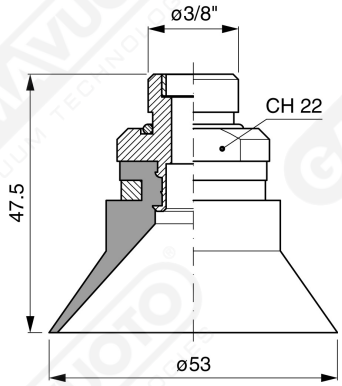

Art. EF 50 80 ÷ 84

Art. EF 50 80
with filter

Art. EF 50 81
with filter and check valve

Art. EF 50 83
without filter

Art. EF 50 84
with check valve without filter

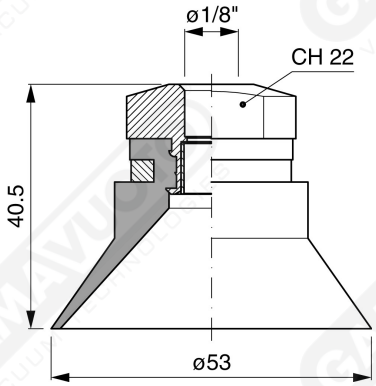

Art. EF 50 90 ÷ 93

Art. EF 50 90
with filter

Art. EF 50 91
with check valve

Art. EF 50 93
without filter