Centralized pneumatic vacuum system



The centralized pneumatic vacuum system are powered exclusively by compressed air and gives added security in handling installations because they maintain a vacuum “reserve” when the supply is missing. They are also recommended when linking to a number of machine users in order to centralize the vacuum. The vacuum switch supplied with the depressor activates vacuum generator ignition/extinction; the pre-set vacuum level will be maintained and allows for a lower consumption of energy.

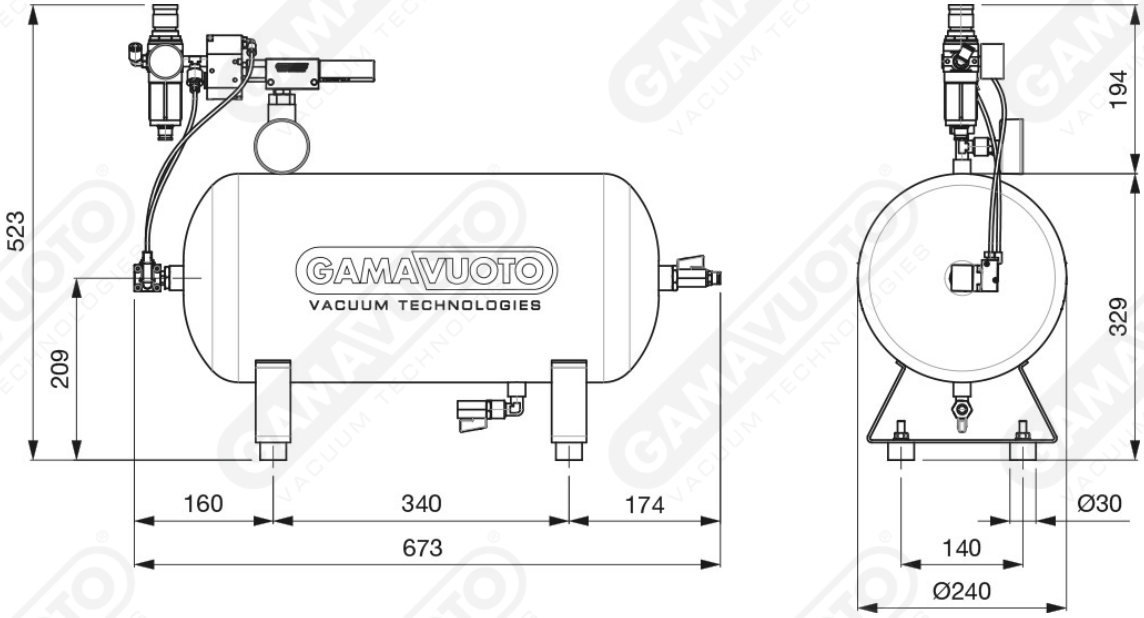

Art. GDP 25 EMV5

Art	Vacuum generator	Capacity m^3	Tank litres	Weight kg
GDP 25 EVM5	EVM 5	74	25	15