# Ventose sferiche standard con supporto femmina



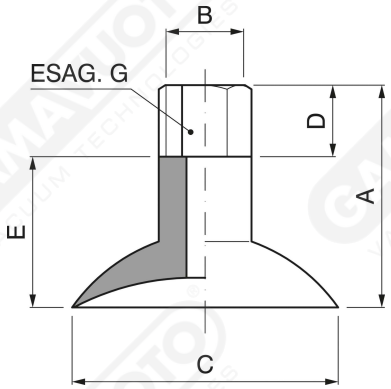


**Art. VSUF 10 ÷ 30/L**

| Art. | Vent. | + Supp. | A | B | CØ | D | E | G |
|---|---|---|---|---|---|---|---|---|
| **VSUF 10** | V10 | SUF 51 | 23 | 1/8” | 10 | 12 | 11 | 14 |
| **VSUF 12** | V12 | SUF 51 | 23 | 1/8” | 12 | 12 | 11 | 14 |
| **VSUF 15** | V15 | SUF 51 | 24 | 1/8” | 15 | 12 | 12 | 14 |
| **VSUF 18** | V18 | SUF 51 | 24 | 1/8” | 18 | 12 | 12 | 14 |
| **VSUF 20** | V20 | SUF 51 | 25 | 1/8” | 20 | 12 | 13 | 14 |
| **VSUF 22** | V22 | SUF 51 | 25 | 1/8” | 22 | 12 | 13 | 14 |
| **VSUF 25/L** | V25/L | SUF 57 | 28 | 1/8” | 25 | 12 | 16 | 14 |
| **VSUF 30/L** | V30/L | SUF 57 | 28 | 1/8” | 30 | 12 | 16 | 14 |

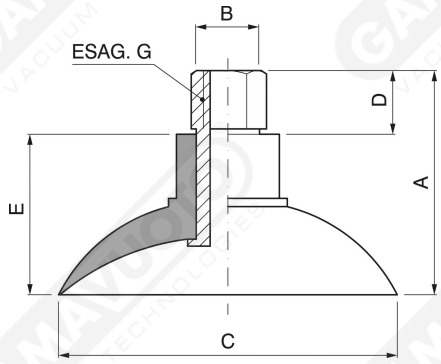


**Art. VSUF 35/L ÷ 45/L**

| Art. | Vent. | + Supp. | A | B | CØ | D | E | G |
|---|---|---|---|---|---|---|---|---|
| **VSUF 35/L** | V35/L | SUF 52* SUM14 | 30 | 1/4”* | 35 | 13 | 17 | 19 |
| **VSUF 45/L** | V45/L | SUF 52* SUM14 | 33 | 1/4”* | 45 | 13 | 20 | 19 |

* Disponibile anche con attacco femmina 1/8” SUF 58*

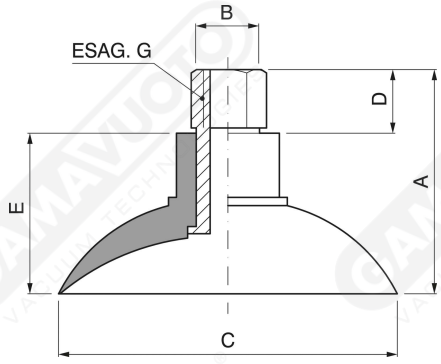


**Art. VSUF 60 ÷ 87**

| Art. | Vent. | + Supp. | A | B | CØ | D | E | G |
|---|---|---|---|---|---|---|---|---|
| **VSUF 60** | V60 | SUF 52* SUM21 | 35 | 1/4”* | 60 | 13 | 22 | 19 |
| **VSUF 65** | V65 | SUF 52* SUM21 | 37 | 1/4”* | 65 | 13 | 24 | 19 |
| **VSUF 87** | V87 | SUF 54 SUM21 | 55 | 1/4” | 87 | 15 | 40 | 19 |

* Disponibile anche con attacco femmina 1/8” SUF 58*