Portaventosa speciali con aspirazione laterale

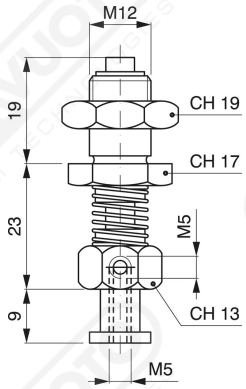

Art. PSMO 20-40 C. 5

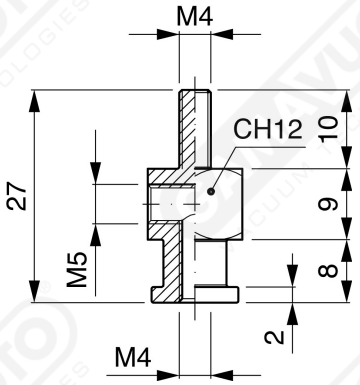

Art. SUM68

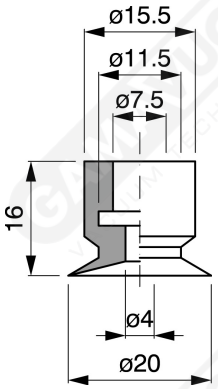

Art. VSP 20/2

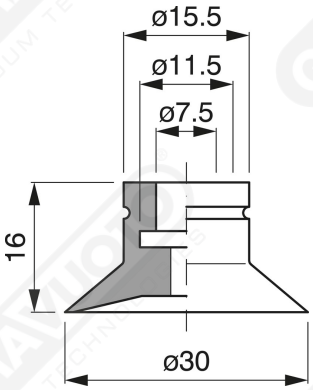

Art. VSP 30/2

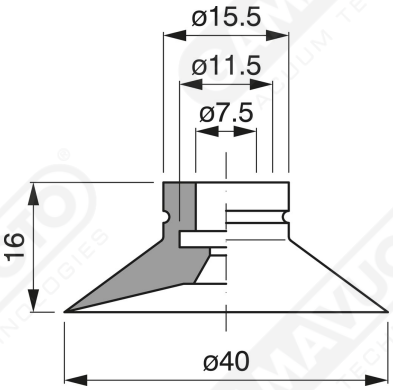

Art. VSP 40/2

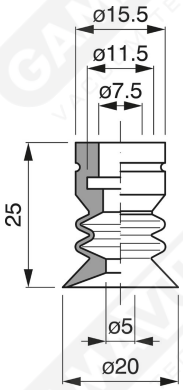

Art. VSS20/5

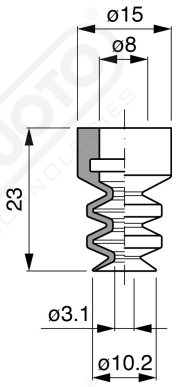

Art. VSSC 10

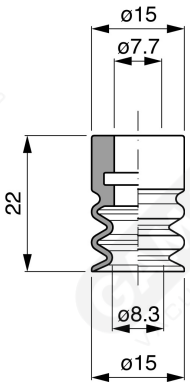

Art. VSSC 15

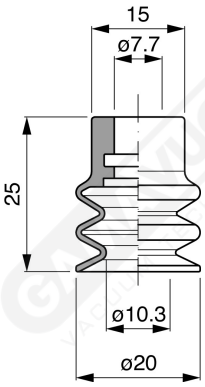

Art. VSSC 20

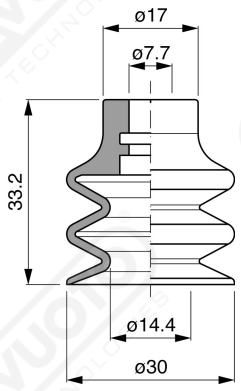

Art. VSSC 30